REVISIONS				
REV. SYM.	E.C.O. NUMBER	DESCRIPTION	BY DATE	APP'D DATE
1		ORIGINAL RELEASE	JMC 7-13-01	JWJ 7-13-01

UNCONTROLLED DOCUMENT WILL NOT BE UPDATED

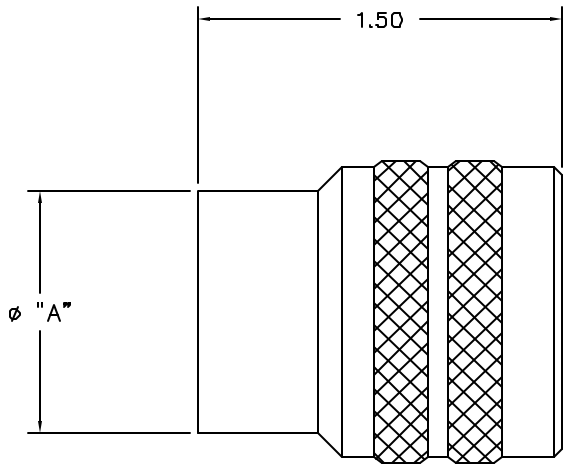

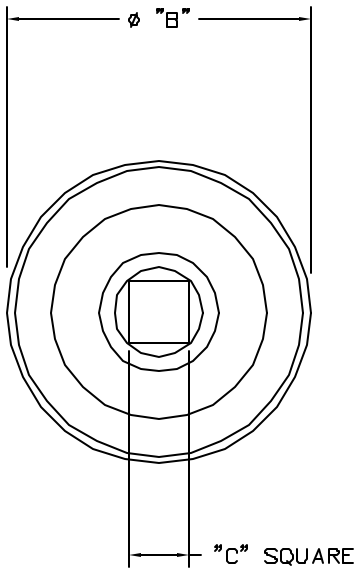

PART NO.	DIM. "A"	DIM. "B"	DIM. "C"	KEYING POSITIONS
CM5015R-48	2.135	2.984	3/8	ALL
CM5015R-44	2.485	2.734	3/8	ALL
CM5015R-40	2.230	2.484	3/8	ALL
CM5015R-36	1.980	2.234	3/8	ALL
CM5015R-32	1.768	1.994	3/8	ALL
CM5015R-28	1.518	1.740	3/8	ALL
CM5015R-24	1.298	1.494	3/8	ALL
CM5015R-22	1.173	1.369	3/8	ALL
CM5015R-20	1.048	1.369	3/8	ALL
CM5015R-18	.928	1.119	1/4	ALL
CM5015R-16	.803	1.000	1/4	ALL
CM5015R-14	.673	.874	1/4	ALL
CM5015R-12	.553	.874	1/4	ALL
CM5015R-10	.443	.874	1/4	ALL
CM5015R-8	.365	.874	1/4	ALL

RESTRICTED & CONFIDENTIAL

CONFIDENTIAL PROPERTY OF DANIELS MANUFACTURING CORP. NOT TO BE DISCLOSED TO OTHERS, REPRODUCED OR USED FOR ANY OTHER PURPOSE, EXCEPT AS AUTHORIZED IN WRITING BY DANIELS MANUFACTURING. MUST BE RETURNED TO DANIELS MANUFACTURING CORP. ON COMPLETION OF ORDER OR OTHER PURPOSE FOR WHICH LENT.

DO NOT SCALE DRAWING

MATERIAL

HEAT TREAT

FINISH

ITEM	PART NO.	QTY.	DESCRIPTION/REMARKS

DRN.	JMC	DATE	7-13-01
CHK'D.	JWJ	DATE	7-13-01
APP'D.		DATE	
APP'D.		DATE	

DMC DANIELS MANUFACTURING CORP. ORLANDO, FLORIDA CAGE 17851

TITLE ADAPTOR TOOL SET FOR MIL-C-5015 RECEPTACLES ENVELOPE DRAWING

WHERE USED:

SIZE	SCALE	CAD P/N	SHEET	OF
B	2X	CM-S-5015R-ENV	1	1

POSTING	P/N	REV.
	CM-S-5015R-ENV	1